This is a legacy product document supported by Resideo. It is no longer manufactured

Honeywell

CM702
PROGRAMMABLE THERMOSTAT

PRODUCT SPECIFICATION SHEET

The **CM702** thermostat is designed to provide automatic time and temperature control of heating systems in villas and apartments.

It can be used as part of a system in conjunction with combi boilers, oil-burners and gas fired boilers, circulation pumps, thermal actuators, zone valves and electric heat systems (<**5A**).

The **CM702** is designed with the installer in mind and includes a moulded back-plate with trunking guides and wiring breakouts to make installation quick and easy.

The **CM702** large LCD display, button layout based on the same simple programming philosophy used on our acclaimed CM20 products and the introduction of an 'OK' button makes it easier to install and more user friendly.

The **CM702** features a unique programming function that allows the user to select an alternative time & temperature profile whenever their lifestyle requirements change (e.g. weekend, bank holiday). The unit is ideal for consumers who want reliable precise temperature control from a modern looking, simple to program and easy to use product.

FEATURES

- **Attractive slim, modern styling makes it ideal for location in any type of home.**
- **24-hour heating program.**
- **Up to 4 daily independent time and temperature level changes let you set 4 time and temperatures pairs to suit your lifestyle.**
- **Temporary programmed temperature override to temporarily override the programmed temperature till the next switch point.**
- **1/2 Program button allows switching to an alternative heating program whenever it's required with just one button press. This alternative program can be adjusted in exactly the same way as the normal heating program.**
- **Room Temperature Enquiry.**
- **EEPROM memory holds the user program indefinitely.**
- **OFF mode has an integral frost protection setting at minimum 5°C (installer adjustable) so that pipes in the house will never freeze in winter.**
- **24...230V 5A resistive, 2A inductive SPDT relay provides compatibility with most domestic central heating systems reducing the need to stock many different models.**
- **Battery powered by 2 x AA size (LR6) alkaline cells.**
- **Minimum battery life of 2 years with low battery warning indicator.**
- **Built-in default heating program.**
- **Surface or wall box mounting options, with trunking guides and wiring breakouts to simplify installation.**
- **No installer links or special installer switches on the back of the unit mean no adjustment is required for combi-boilers and most domestic central heating systems.**
- **User Set-Up Mode allows extra functions to be set at the discretion of the user:**
  - **AM-PM or 24hr time display.**
  - **Resetting the heating profile to factory default.**
- **Installer Set-Up Mode allows extra functions to be set at the discretion of the installer to match the consumers applications and needs:**
  - **Pump Exercise.**
  - **Upper / Lower Set point Limit Adjust.**
  - **Temperature offset.**
  - **Minimum ON time.**
  - **Cycle rate.**
  - **Proportional Band Width.**
- **Diagnostic Mode to assist in fault finding.**

CONTROLS / DISPLAY LAYOUT

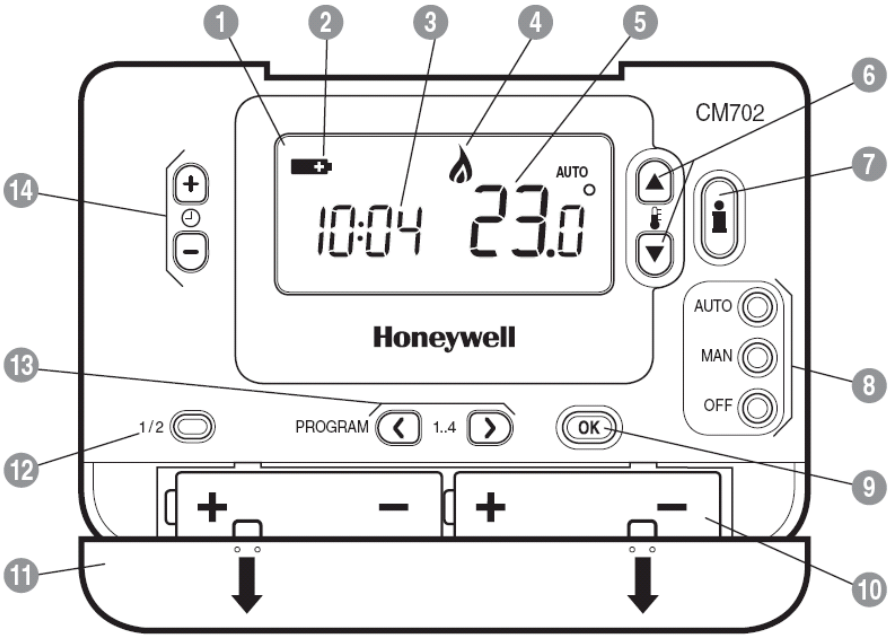

PRODUCT LAYOUT:

1. **LCD Screen**
2. **Battery Low Indicator**
3. **Time Display**
4. **Burner On Indicator**
5. **Temperature Display**
6. **Temperature Change Buttons**
7. **Information Enquiry Button**
8. **Operating Mode Buttons**
9. **Green OK Button**
10. **Battery Compartment**
11. **Battery Cover**
12. **1 / 2 Program Button**
13. **Program Buttons**
14. **Time Change Buttons**

SPECIFICATION

Batteries	:	2 x 1.5 V IEC LR6 (AA) Alkaline cells
Battery life	:	Minimum 2 years
Battery replacement	:	Program retained in EEPROM
Switch type	:	SPDT (potential free)
Electrical rating	:	230 V~, 50...60 Hz, 0.1 A to 5 A resistive 0.1 A to 2 A inductive (0.6 pf) 24 V~, 50...60 Hz, 0.5 A to 5 A resistive 0.5 A to 2 A inductive (0.6 pf)
Time display	:	24 hour or 12 hour AM/PM format
Time keeping accuracy	:	Typically better than 10 minutes per year
Program	:	2 independent sets of 4 daily time and temperature level changes that can be switched between as desired.
Time setting resolution	:	Time of day - 1 minute Program - 10 minute steps
Sensing element	:	100K (@ 25°C) NTC thermistor
Temperature setting range	:	Program : 5 to 35°C in 0.5 °C steps Frost : 5°C or equal to lower limit (5°C to 21°C).

Temperature control accuracy	:	±0.5 K (nominal) @ 20°C, 50% load 3 K Δ/hour
Room Temperature display range	:	From 0°C to 50°C
Control form	:	P + I (Proportional + Integral)
Minimum ON time	:	10% of cycle time (min one minute), adjustable to 2 to 5 min (see installer set up)
Cycle rate	:	Selectable by application (see installer set up)
Wiring	:	Terminal block capable of accepting wires up to 2.5 mm^2
Wire access	:	Mains wiring – rear right. Low voltage wiring – rear right.
Dimensions	:	133 x 88.5 x 26 mm (w x h x d) 133 x 175 x 26 mm (w x h x d) (flap open)
Environmental	:	Operating temperature range 0 to 40°C Shipping and storage temperature range -20 to 55°C Humidity range 10 to 90% rh, non-condensing
Approvals	:	Designed to meet European EN approvals EN60730-1(Nov 2000), EN55014-1 (1997), EN55014-2 (2000)

INSTALLER SET-UP

To enter the installer set-up mode:

a) Press the **OFF** button.

b) Press and hold the **INFO i** button and the two program buttons '< >' together.

c) The unit will display the first parameter of installer parameter group category 1 (from n.1 to n.19).

d) Press the **TEMP** ▲ or ▼ buttons to change the factory setting. The display will flash indicating that a change has been made.

e) Press the green **OK** button to confirm this change and the display will stop flashing.

f) Press the ◷ **+** button to go to the next parameter.

g) Press the program button **>** to go to category 2 in the Installer mode (from n.1 to n.5).

h) To exit the installer mode, press the **AUTO**, **MAN** or **OFF** buttons.

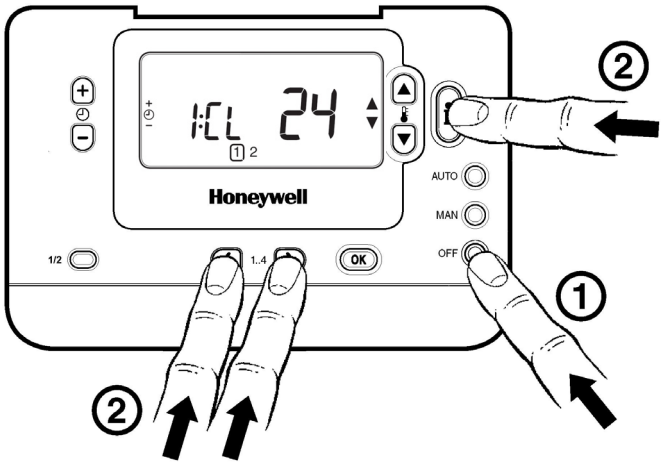

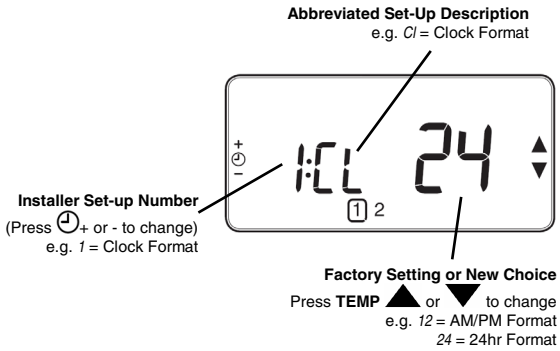

In Installer set-up we can:

- ❑ Set-up specific applications
- ❑ Enable special features

Specific Applications		Setting		What do you need to change?
		Cycle/ Hour	Minimum ON time (in minutes)	**Note :** a. To change Cycle/Hour, please go to parameter n. 2, category 2 in the installer set-up mode. b. To change Minimum ON Time, please go to parameter n. 1, category 2 in the installer set-up mode.
Heating	Gas Boilers (<30KW)	6	1	No action required
	Oil Boiler	3	4	1. Set Minimum ON Time to 4 minutes. 2. Set Cycle/Hour to 3.
	Thermal Actuator	12	1	Set Cycle/Hour to 12.
	Zone valve	6	1	No action required.
	Electric heating (for applications <5A)	12	1	1. Set Cycle/Hour to 12.

Special Features	Description	What to do if we wish this feature
AM-PM/ 24hr Display	Change display format (default 24hr).	Set parameter n.1, category 1 in the installer set -up mode to 12.
Pump exercise	When enabled the Pump Exercise will switch the relay on for 1 minute at 12:00 if the relay has not been switched on since 12:00 the previous day. While in Holiday mode the Pump Exercise feature, if enabled, will operate.	Set parameter n.5, category 2 in the installer set -up mode to 1.
Upper Temperature Limit	The normal upper temperature limit of 35°C can be reduced down to 21°C to save the homeowner energy. Useful if the homeowner rents to tenants.	Set parameter n.6, category 1 in the installer set -up mode to the desired limit.
Lower Temperature Limit	The normal lower temperature limit of 5°C can be increased up to 21°C to protect the inhabitants from cold. Useful if the inhabitants include the elderly, children or disabled.	Set parameter n.7, category 1 in the installer set -up mode to the desired limit.
Temperature Offset	If the thermostat is located in a hot/cold location and cannot be moved because of wiring then the measured/ displayed temperature can be adjusted by +/- 3°C. Useful if the homeowner wants the reading to match another appliance temperature display.	Set parameter n.12, category 1 in the installer set -up mode to the desired offset value.
Proportional Band Width	Can be adjusted up to 3°C (default is 1.5 °C) to provide better temperature control (less overshoot). Useful for: a. Well insulated homes with over-sized heating systems. b. Air systems with fast response.	Set parameter n.13, category 1 in the installer set -up mode to the desired value.

Parameter	Installer Set-Up Number / Abbreviation (Press + or - keys to select)	Factory Setting		Optional Setting		Installer Set-Up Category (Press PROG keys '< or >' to select)
		Display	Description	Display/Setting	Description	
Category 1: Thermostat Parameters						
AM-PM / 24hr Display	1:Cl	24	24 hr clock display	12	12 hr AM / PM clock display	1
RESET Time / Temperature Program	2:rP	1	Time / Temperature profile set to factory default Changes to 0 when one of the time/temp profiles are changed	0 1	Time / Temperature are as programmed To restore the factory profile set to 1	1
Upper Temperature Limit	6:uL	35	35°C Upper Temp. Limit	21 to 34	21°C to 34°C adjustment in 1°C steps	1
Lower Temperature Limit	7:LL	5	5°C Lower Temp. Limit	6 to 21	6°C to 21°C adjustment in 1°C steps	1
Temperature Offset	12:tO	0	No offset	-3 to +3	-3°C to +3°C adjustment in 0.1°C steps	1
Proportional Band Width	13:Pb	1.5	1.5°C Proportional Band	1.6 to 3.0	1.6°C to 3.0°C adjustment in 0.1°C steps	1
Reset Parameters to Factory Defaults	19:FS	1	All settings held are the factory defaults. Changes to 0 when one of the parameter values are changed	0 1	Settings are as modified above To restore the factory profile set to 1	1
'Category 2: System Parameters (You must press the '>' program key to enter this section)						
Minimum ON Time	1:Ot	1	1 minute minimum ON time	2 to 5	2 - 2 minutes 3 - 3 minutes 4 - 4 minutes 5 - 5 minutes	2
Cycle Rate	2:Cr	6	6 cycles per hour (cph) for gas boilers, zone valves and fan-coil	3, 9, 12	3 - 3 cph 9 - 9cph 12 - 12 cph	2
Pump Exercise	5:PE	0	Pump Exercise	1	Pump Exercise Enabled	2

DIMENSIONS

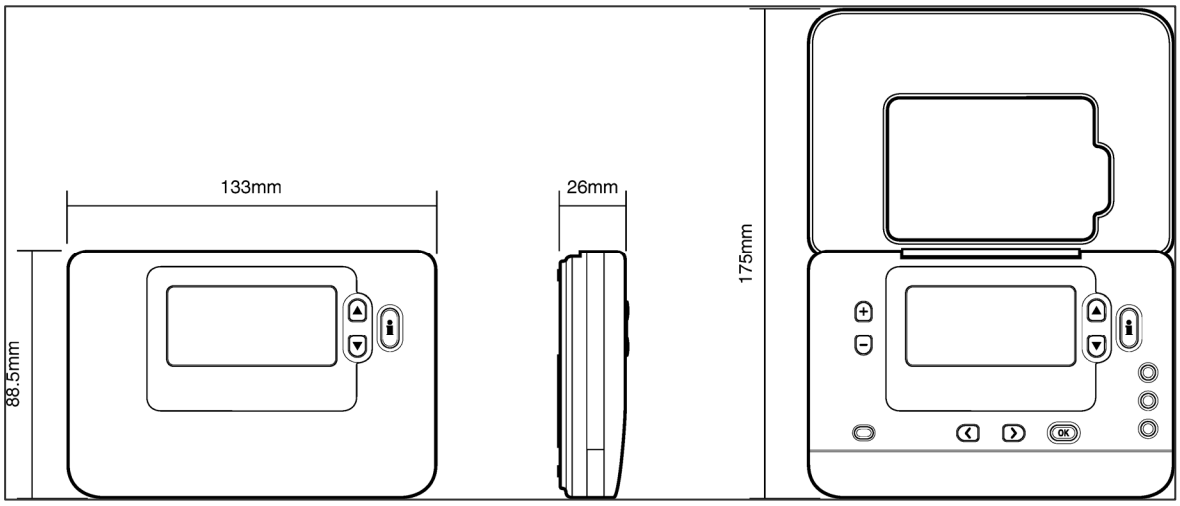

INSTALLATION

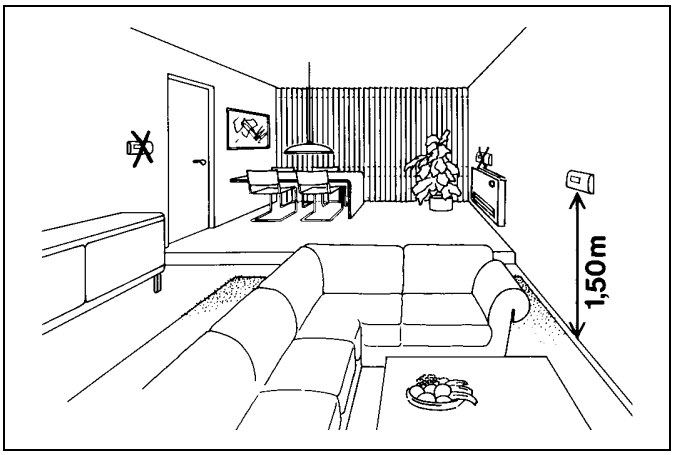

LOCATION

The ***CM702*** thermostat is the control element of the heating system and, therefore, MUST be located in a position with good air circulation, at average room temperature and on an inside wall, 1.5 metres above the floor level. Do not position the ***CM702*** thermostat near sources of heat (radiators, hot air vents, TV or lights), near doors or windows, or in direct sunlight.

MOUNTING

The ***CM702*** thermostat can be mounted directly on the wall surface or on to an electrical wall box.

WIRING

The ***CM702*** thermostat is designed for fixed wiring only and must be installed in accordance with the latest I.E.E. regulations. Ensure the wiring connection to the supply is via a fuse rated at no more than **5 amps** and a Class "A" switch (having contact separation of at least 3 mm in all poles).

IMPORTANT

1. *The installer must be a trained service engineer*
2. *Disconnect the power supply before beginning installation*

WIRING

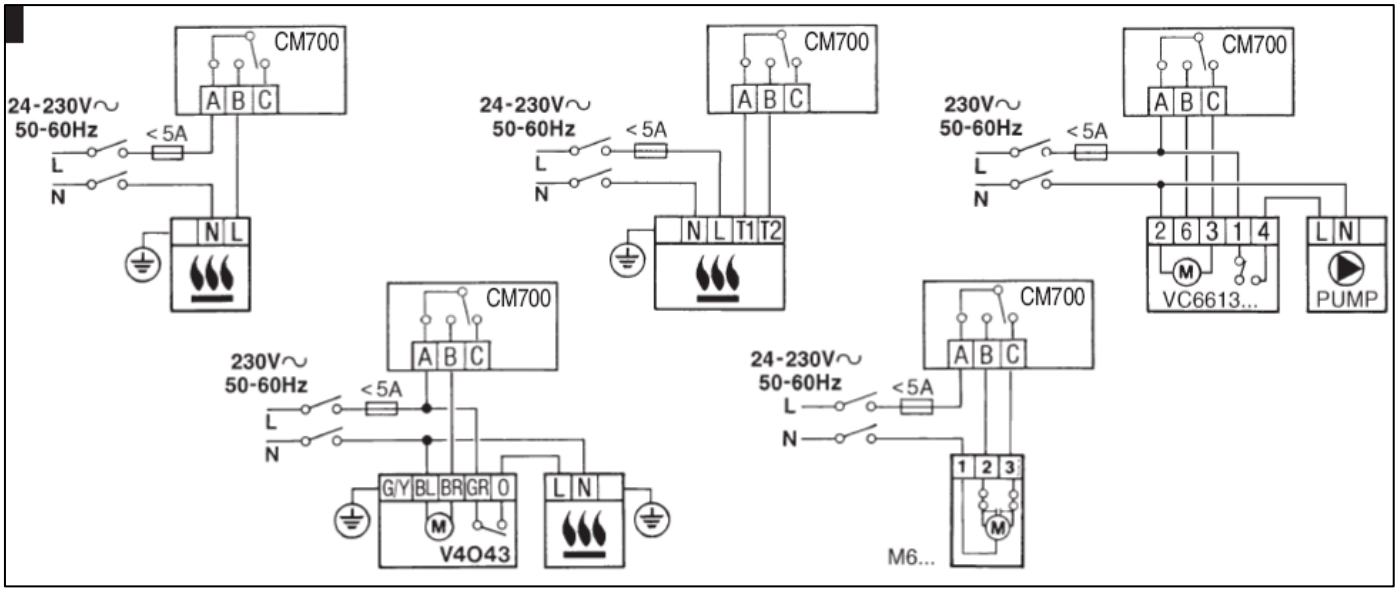

ORDERING SPECIFICATION

Description	Model	Logo	Literature	Availability	Spec Sheet
1+1 day programmable thermostat	**CMT702A1004**	Honeywell	French, Dutch, Italian, Spanish, German, Portuguese.	**Sep 05**	**ENOH8545**
1+1 day programmable thermostat with **6 switch points** (instead of 4).	**CMT702A1012**	Honeywell	French, Dutch, Italian, Spanish, German, Portuguese.	**Oct 06**	**ENOH8545**

Honeywell Control Systems Limited
Newhouse Industrial Estate
Motherwell ML1 5SB
United Kingdom

http://europe.hbc.honeywell.com